TTsM 9210
Digital Small-Size Thermometers

OKP code 42 1100

- **Wide range of TTTs temperature sensor models is a great solution for any contact temperature measurement**
- **On-line temperature control**
- **TTsM 9210 Thermometers are designed as a substitute for TTsM 9210 liquid-filled glass thermometers (mercurial, etc.)**
- **TTsM 9210 provide efficient temperature indication under low illumination**
- **The unit is powered by built-in batteries or by network power**
- **One measuring unit can be used for operation with several temperature sensors**
- **TTsM 9210 Thermometers are produced in a portable plastic case**
- **Over 200 companies in Russia, Belarus and the Baltics have appreciated the simplicity of operation, high reliability and metrological parameters**
- **Entered into the State Register of measuring instruments under #14394, Certificate #8943**

TTsM-9210 Digital Small-size Thermometers (thermometers) are designed for temperature measurement of granular and fluid media by temperature sensor immersion into media (submersible measurements) or for contact measurements of surface temperature (surface measurement), displaying measured temperature on electronic module digital display.

Thermometers are used in scientific research, in technological processes in mining, oil, wood-processing, food and other industries.

P.O. box 11608, 29, Komsomolsky Prospect, Chelyabinsk, 454138, Russia
tel. +7 351 7418322, fax +7 351 7414517. e-mail:metran@metran.ru
www.metran.ru

DESIGN AND OPERATION

Thermometers consist of TTTs temperature sensor (temperature converters) (hereinafter referred to TTTs), an electronic module and a network power supply.

TTTs consists of a sensing element (further SE) with protection enclosure, internal connection wires and external terminals for connection to a thermometer electronic module. TTTs sensor uses Pt100 resistance temperature detectors per GOST 6651-94, THA(K) thermocouples per GOST 50431-92 as SE.

Electronic module is designed to convert a signal from TTTs output into measurable data signal shown on a digital display.

According to design features and functional capabilities of an electronic module, there are four models of thermometers: TTsM 9210M1, TTsM 9210M2, TTsM 9210M3, and TTsM 9210M4.

Five versions of TTsM 9210M1, M4 are available: TTsM 9210M1 (M4)-00, -01, -03, -03P, -04.

TTsM 9210M1, TTsM 9210M4 operate together with one of TTTs, either submersible or surface one, or alternately with several submersible TTTs 13-180.

TTsM 9210M2, TTsM 9210M3 operate alternately with two TTTs: submersible and surface.

TTsM 9210M1, TTsM 9210M2 have LCD indicators,

TTsM 9210M3, TTsM 9210M4 have LED indicators.

Network power supply charges built-in batteries and supplies thermometer under stationary conditions.

BASIC PERFORMANCE SPECIFICATIONS

Thermometer measurement mode, TTsM version, sensing element type and standard curve, measured temperature ranges, reference accuracy limit of temperature measurement, resolution are given in Table 1.

Table 1

TTsM Thermometer Model	Version	Measurement Mode	TTTs Temperature Converter Model	Sensing Element Type and Standard Curve	Temperature Ranges, °C	Reference Accuracy Limit, %	Resolution, °C
TTsM 9210M1, M4	-00	submersible	TTTs01(I)-180	Pt100	-50...200	±(0.1+*)	0.1
			TTTs12-180				
			TTTs10-180				
			TTTs13-180			±(0.25+*)	
	-01	submersible	TTTs03(I)-500	THA (K)	0...500	±(0.5+*)	1
	-03	submersible	TTTs05-600		0...600		
			TTTs11-300		-50...300		
			TTTs11-600		0...600		
	-03P	surface	TTTs07P-600		0...600	±(2.0+*)**	
			TTTs08-300		-50...300		
			TTTs08U-300				
			TTTs09-300				
	-04	submersible	TTTs06-1300		0...1300	±(0.5+*)	
TTsM 9210M2, M3***	-	submersible	TTTs03(I)-500		0...500	±(0.5+*)	
			TTTs05-600		0...600		
			TTTs06-1300		0...1300		
			TTTs11-300		-50...300		
			TTTs11-600		0...600		
	-	surface	TTTs07P-600		0...600	±(2.0+*)**	
			TTTs08-300		-50...300		
			TTTs08U-300				
			TTTs09-300				

* One unit of the last digit.

** Accuracy value corresponds to the following conditions: roughness parameter Rmax=0.32 mm; holddown pressure: 5...15 N; atmospheric pressure: 100±4 kPa; relative humidity: 65±15%; ambient temperature: 20±8°C; heat exchange with the environment: free convection.

*** TTsM 9210M2 (M3) Thermometers can be supplied with TTTs temperature converters in any combination (submersible + surface).

Thermal inertia index and heat balance setup time are given in Table 2.

Table 2

TTsM Thermometer Model	Version	Measurement Mode	TTTs Temperature Converter Model	Thermal Inertia Index, s / Heat Balance Setup Time, s			
				Media			
				fluid	granular	stagnant gas	metal surface
TTsM 9210M1, M4	-00	submersible	TTTs01(I)-180	2/10	3/17	10/56	-
			TTTs12-180	3/15	4/20	15/85	
			TTTs10-180	4/20	5/25	20/100	
			TTTs13-180* (no thermowell)	4/200	60/300	200/1000	
	-01		TTTs13-180* (with thermowell)	120/600	-	-	
	-03		TTTs03(I)-500	0.5/1.7	0.8/2.7	3/17	-
			TTTs05-600	3/10	5/16	15/48	
			TTTs11-300	0.5/2	0.8/2.6	3/9	
			TTTs11-600				
	-03P	surface	TTTs07P-600	-	-	-	3/10
			TTTs08-300				2/5
			TTTs08U-300				2/5
			TTTs09-300				4/10
	-04	submersible	TTTs06-1300	3/8	5/13	15/40	-
TTsM 9210M2, M3	-	submersible	TTTs03(I)-500	0.5/1.7	0.8/2.7	3/17	
			TTTs05-600	3/10	5/16	15/48	
			TTTs06-1300	3/8	5/13	15/40	
			TTTs11-300	0.5/2	0.8/2.6	3/9	
			TTTs11-600				
	-	surface	TTTs07P-600	-	-	-	3/10
			TTTs08-300				2/5
			TTTs08U-300				2/5
			TTTs09-300				4/10

* TTTs 13-180 temperature converters are used in stationary mode.

DESIGN AND APPLICATION FEATURES

Table 3

TTTs Models	Design and Application Features
TTTs01-180 TTTs01I-180 (needle on the end) TTTs12-180	For submersible measurements in industries (including food and beverage) and laboratory research
TTTs03-500 TTTs03I-500	For measurements in plastics, raw and hard rubber; Distinguishing features: solid needle and low inertia
TTTs05-600	For submersible measurements of fluids and granular media; in production of building materials and other industries
TTTs06-1300	For short-term industrial and laboratory submersible measurements in temperatures up to 1300°C; Distinguishing feature: low inertia; Supplied with thermostable cable (up to 300°C) as an option
TTTs07P-600	Sensor for surface measurements in construction, power and plastics industry. Sensing element can be installed by the consumer at any angle (0-90)° to transmitter axes
TTTs08-300 TTTs08U-300 (angle version)	Sensor with spring-driven measuring element for surface measurements
TTTs09-300	Bow-shaped sensor for temperature measurement of rotating surfaces. Measuring "bow" connection to a holder is provided with 3 degrees of freedom.

Table 3 (continued)

TTTs Model	Application and Design Features
TTTs10-180	Complex sensor for temperature measurement in hard-to-reach high places in power engineering, ecology and agriculture; consists of three bars. Assembled length: from 1.5 to 3 m (3 bars), disassembled length: 0.7 m; assembling time: 30...40 s
TTTs11-300 TTTs11-600	Flexible sensor for temperature measurement in hard-to-reach places and constant surface temperature measurement.
TTTs13-180	Steam and water temperature measurement in closed pipelines under 0.4...10 MPa pressure. Dust and water tightness: IP65 per GOST 14254. Sensor can be placed into a thermowell.

OVERALL DIMENSIONS AND WEIGHT

- Electronic module overall dimensions: 80x145x22 mm
- TTTs overall dimensions: refer to Fig. 1÷11/3
- Electronic module weight: 0.12 kg
- TTTs weight: 0.14 to 2 kg (according to model and overall dimensions)

POWER CONSUMPTION

Thermometer is supplied by:
- built-in batteries with supply voltage of 4.2 V minimum;
- network power supply with supply voltage of 5-6.4 V.

RESISTANCE TO EXTERNAL EFFECTS

Version according to resistance to temperature and air humidity per GOST12997:

- C3 for TTsM-9210M1, TTsM-9210M2
temperature -10...40°C,
humidity, max 95% at 35°C;

- C4 for TTsM-9210M3, TTsM-9210M4
temperature -40...50°C,
humidity, max 95% at 35°C.

Dust and water tightness for electronic module: **IP30** per GOST 14254.

VERIFICATION

Verification interval: 1 year.
Verification Procedure: MI 2341-95.

WARRANTY

Warranty period: 24 months from the date of commissioning.

Storage warranty period: 6 months from the date of production.

Average life time: minimum 5 years.

DELIVERY SET

1. Measuring unit: 1 unit.
2. TTTs sensor:
   - for TTsM 9210M1, TTsM 9210M4: 1 unit;
   - for TTsM 9210M2, TTsM 9210M3: 2 units.
3. Network power supply: 1 unit.
4. Case: 1 unit.
5. Product Data Sheet: 1 copy.
6. Verification Procedure: MI 234-95*.
7. Connection cable (with TTTs13-180).

** Upon Customer's request.*

ORDERING INFORMATION

TTsM-9210 - M1-00	**supplied with:**	**TTTs01-180; D=4.0 mm, L=100 mm**	**- GP**	**- TU...**
TTsM-9210 - M3	**supplied with:**	**1. TTTs 07P-600-L=200 mm-I** **2. TTTs 03I-500-L=100 mm**	**- VK**	**- TU...**
1		*2*	*3*	*4*

1. TTsM9210 digital thermometer model (Table 1).
2. TTTs sensor model (Table 1); indicate if necessary:
   L - immersion length, mm (Fig. 1÷11/3),
   D - sensor diameter, mm (Fig. 1÷11/3),
   Lк* - cable length, mm (Fig. 1÷11/3),
   type of hot junction insulation (I - insulated, N - non-insulated).
3. Metrological verification:
   GP - verification by GosStandard Authorities,
   P - metrological verification by manufacturer.
4. Specifications: TU 4211-001-13282997-00.

OVERALL DIMENSIONS

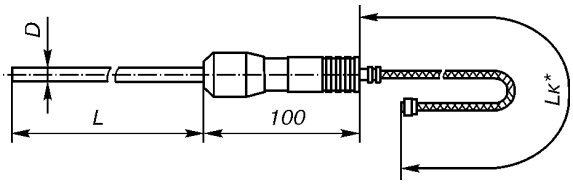

D, mm	L, mm
3.0	80, 100, 160, 200
4.0	100, 160, 200, 400, 500, 800
6.0	200, 400, 600, 800, 1000, 1500

Fig.1. TTTs01-180.

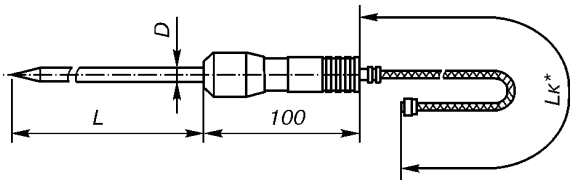

D, mm	L, mm
3.0	80, 100, 160, 200
4.0	100, 160, 200, 400, 500, 800
6.0	200, 400, 600, 800, 1000, 1500

Fig.1/1. TTTs01I-180.

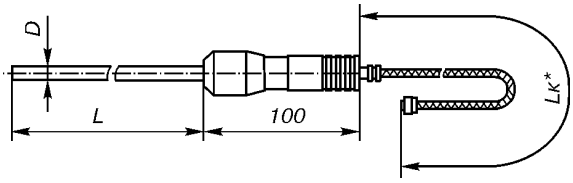

D, mm	L, mm
3.0	80, 100, 160, 200
4.0	100, 160, 200, 400, 500, 800
6.0	200, 400, 600, 800, 1000, 1500

Material: KTMS(HA) cable (L-length part).
Junction is made insulated or non-insulated upon Customer's request.

Fig.2. TTTs05-600.

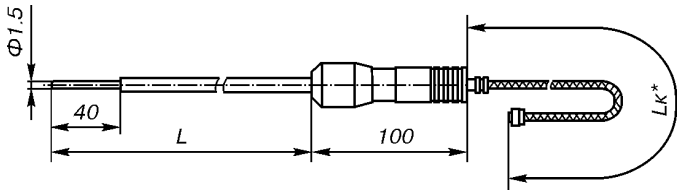

L, mm
120

Junction: insulated.

Fig.3. TTTs03-500.

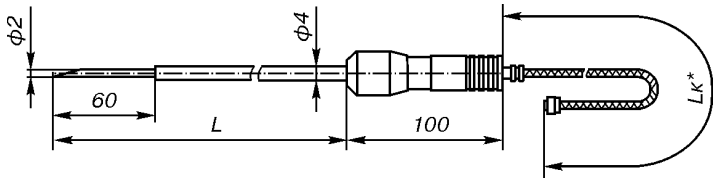

L, mm
80, 100, 180

Junction: non-insulated. Needle material: hard steel.

Fig.3/1. TTTs03I-500.

*Standard cable length Lк=1.5 m.
Another cable length Lк shall be specified in the order.

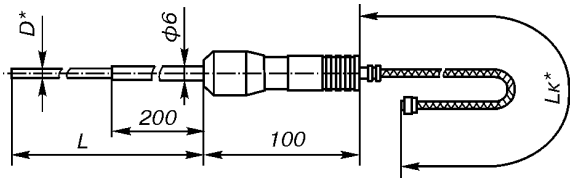

D, mm	L, mm
3.0	400, 500, 800, 1000
6.0	400, 500, 800, 1000, 1500

* Material: KTMS cable.

Fig.4. TTTs06-1300.

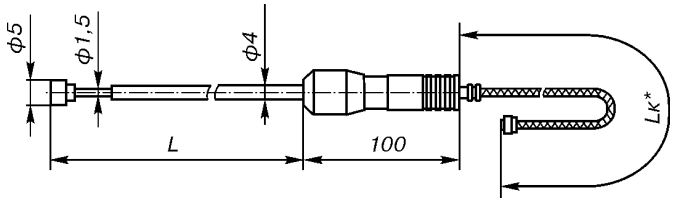

L, mm
140, 200, 300, 400, 500, 800

Junction is made insulated or non-insulated upon Customer's request.
Option: angle version.

Fig.5. TTTs07P-600.

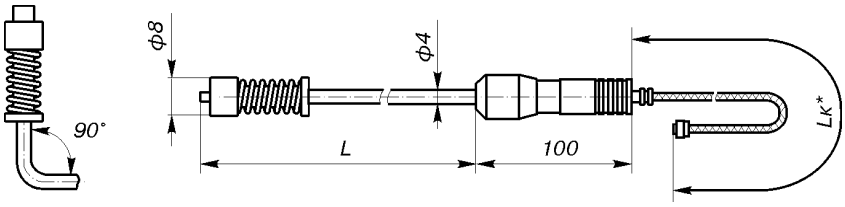

L, mm
100, 140, 200, 300, 400

Option: angle version.

Fig.6. TTTs08(U)-300.

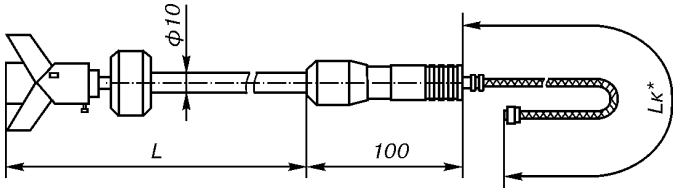

L, mm
100, 200, 300

Fig.7. TTTs09-300.

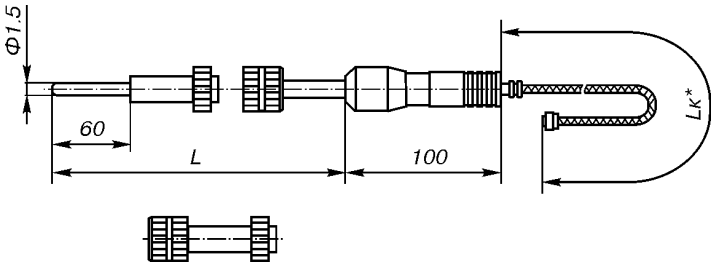

L, mm
1500, 2000, 2500, 3000

Fig.8. TTTs10-180.

*Standard cable length Lк=1.5 m.
Another cable length Lк shall be specified in the order.

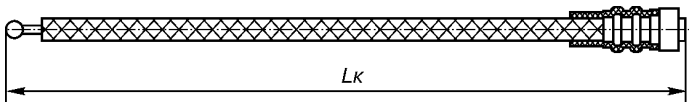

L, mm
500, 1000, 1500, 2000, 2500, 3000, 4000, 5000

Material: HA cable in fluoroplastic insulation.

Fig.9/1. TTTs11-300.

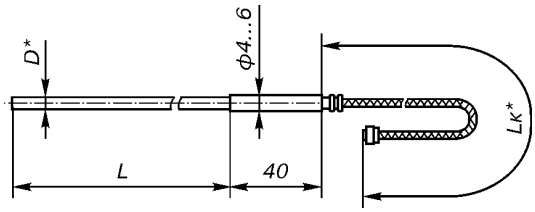

D, mm	L, mm
1.5	200, 400, 600, 800, 1000, 1500
3.0	200, 400, 600, 800, 1000, 1500
4.0	200, 400, 600, 800, 1000, 1500

* Material: KTMS(HA) cable.

Fig.9. TTTS11-600.

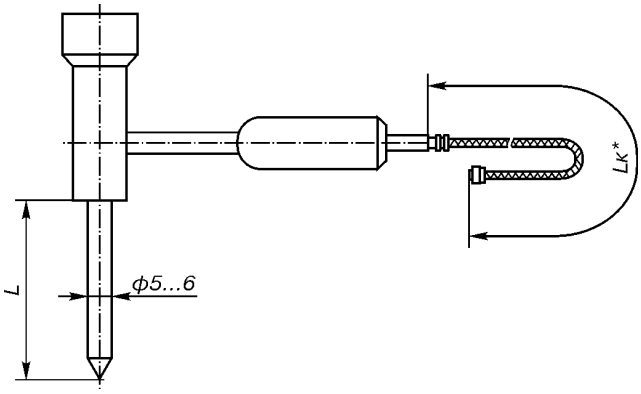

L, mm
80, 100, 120, 160, 200, 250, 320, 400, 500

Fig.10. TTTs12-180.

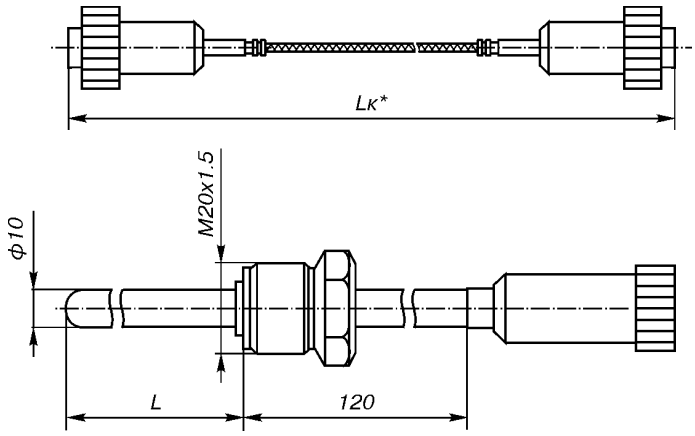

L, mm
80, 100, 120, 160, 200, 250, 320, 400, 500

Fig.11/1. TTTs13-180/1.

*Standard cable length Lк=1.5 m.
Another cable length Lк shall be specified in the order.

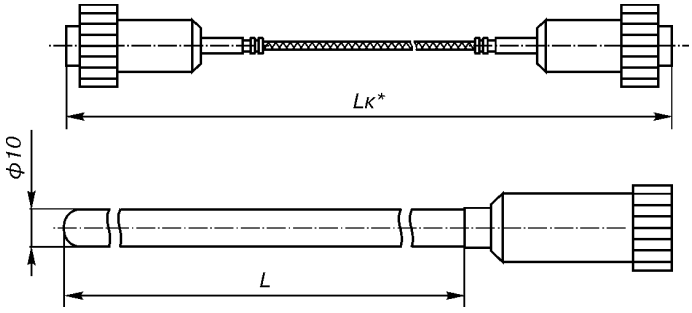

L, mm
80, 100, 120, 160, 200, 250, 320, 400, 500

Fig.11/2. TTTs13-180/2.

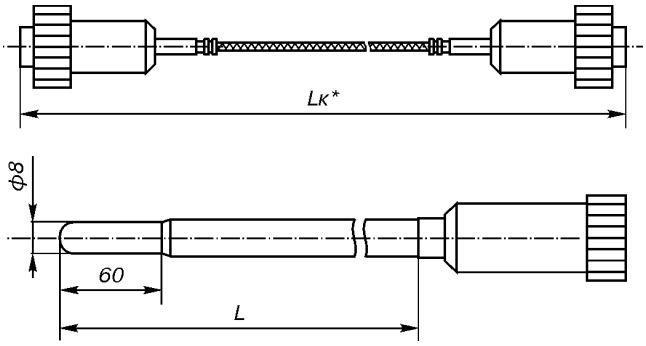

L, mm
80, 100, 120, 160, 200, 250, 320, 400, 500

Fig.11/3. TTTs13-180/3.

*Standard cable length Lк=1.5 m.
Another cable length Lк shall be specified in the order.